Guangdong Uchi Electronics Co.,Ltd

Specification sheet

Customer	
Product	3V Li-MnO2 button cell
Model	CR2032
P/N	
Approval	

Manufacturer	UCHI	Origin	Dongguan
Design by	ZJY	Check by	Jack Chen
Design date	2019-06-04	Version	V2.0

WEB: www.uchidg.com TEL:+86-13925862052 E-MAIL:Anna@uchidg.com

Contents

1. Product name and applicable range

This specification is applicable to the following product: 3V Li-MnO2 button cell CR2032.

The applicable range of CR2032 are mainly used in: RTC clock circuit, Led products and etc.

2. Dimensions

diameter(mm)	
height(mm)	
weight(g)	

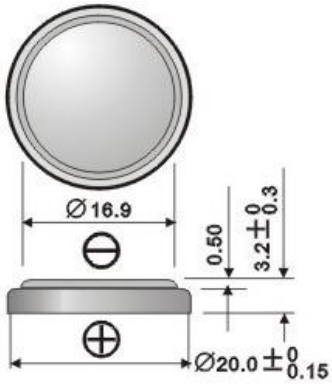

3. Nominal specification and Characteristics

Item		technical parameters	Conditions
Nominal voltage		3.0 V	apply to all CR batteries
Nominal capacity		230mAh	Continuous discharge with load 15kΩ, till 2.0v end-voltage at 20~25℃
Instantaneous short–circuit current		≥250mA	Time≤0.5′
open-circuit voltage		≥3.20V	No load test
Storage temperature		0~35℃	apply to all CR batteries
Operate temperature		-20-60℃	apply to all CR batteries
Self-discharge rate		≤5% / year	annual mean
Test life	Fresh cell	≥230hrs	load 3kΩ, till 2.0v end-voltage at 20~25℃, humidity≤75%
	12 Month.	≥220hrs	

Comments 1:the product standard on electrical chemistry system and dimension is set according to IEC6008-1:2007(i.e.GB/T8897.1-2008 Primary cell, Chapter 1, Profile).。

4. Performance test

Item	Test method	Standard
1. dimension	With vernier caliper(tolerance≤0.02 ㎜) test, paste on the surface of the caliper contact insulation materials, don't short circuit.	Diameter（㎜）：20.0（-0.2） height（㎜）：3.2（-0.3）
2. open-circuit voltage	With multimeter or voltmeter	≥3.20V
3. Short-circuit current	With multimeter or amperemeter,，test time not more than 0.5 second, must avoid repeating test, test interval shall be more than 0.5 hours.	≥250mA
4. appearance	visual inspection	Clean, clear and correct mark，no rusting, no leakage
5. Test capacity	at 20~25℃, humidity≤75%,with load 3kΩ，till 2.0v end-voltage	≥230 hrs
6. vibration test	vibration 1 hours on a vibration mac hine,with frequency is 100 to 150 ti mes/min	stable performance
7. high temperat ure test	Store 30days at 45±2℃	No leakage
8. overdischarge test	Continuously discharge with 1K load for 5 hours while the voltage get to 2.0V	No leakage
Comments 2: The dimension and performance standard is set according to IEC 60086-2:2007 (i.e GB/T8897.2-2008, Primary cell, Chapter 2: Dimension and technical requirement)		

5. safety test

Experimental project		Project name	Test condition	Standard
The test of the the	A	Altitude simulati on	battery under the condition of pressure is less than 11.6 kPa at least 6 hours.	According to the (i.

expected use	B	heat Shock	Battery under the change condition from – 40 to +75 ℃ for 12 hours,and repeated 10 cycles	According to IE/GB/T 8897.4-2008, Primary cell, Chapter 4: Safety requirement on lithium cell)
	C	vibration	Test the battery in accordance with the requirements of standard sine wave of vibration.In three perpendicular fixed bearing for 12 cycles each azimuth, the cycle time of each bearing a total of 3 hours.	
	D	shock	Tested the battery in three perpendicular fixed position of each azimuth through three times, a total of 18 times.	
The expected error use test	E	short circuit	When the battery in 55 ℃ environment and reaching the temperature balance.The total resistance should be less than 0.1 / Ω for short circuit to the shell temperature dropped to 55 ℃ for at least another short circuit after 1 hour.Continue to observe 6 hours.	
	F	strike	Put a 9.1 kg weight object free fall to strike the battery on a steel rod (diameter 15.8mm) from 610 + 25 mm altitude	
	G	extrusion	Make pressure on the battery, with the initial speed until 1.5 cm / SEC,and power to 13 kn,then release pressure immediately	
	H	forced discharge	Connect the battery with 12 v DC power supply series,make the battery orced discharged after the discharge current reached the maximum	
	I	abnormally charge	Connect the battery with a DC power supply with the cells reversed, withstand 3C(regulated by manufacturer) charging current	
	J	naturaldrop	The battery from 1m and drop to concrete surface,continue 6 times, placed observation in an hour.	
	K	high temperature	put the battery in oven, control the temperature rose to 130 ℃ at a speed of 5 ℃ / min, and heat preservation 10 mins.	
	L	improper installation	A reverse connection with three battery.Circuit resistance is less than 0.1 Ω.	
	M	overdischarge	discharge a battery with 50% depth and in series connection with three qualified batteries.	

Comments 3 :The safety performance standard is set according to IEC 60086-4:2007(i.e GB/T8897.4-2008, Primary cell, Chapter 4: Safety requirement on lithium cell)

6. Discharge characteristic

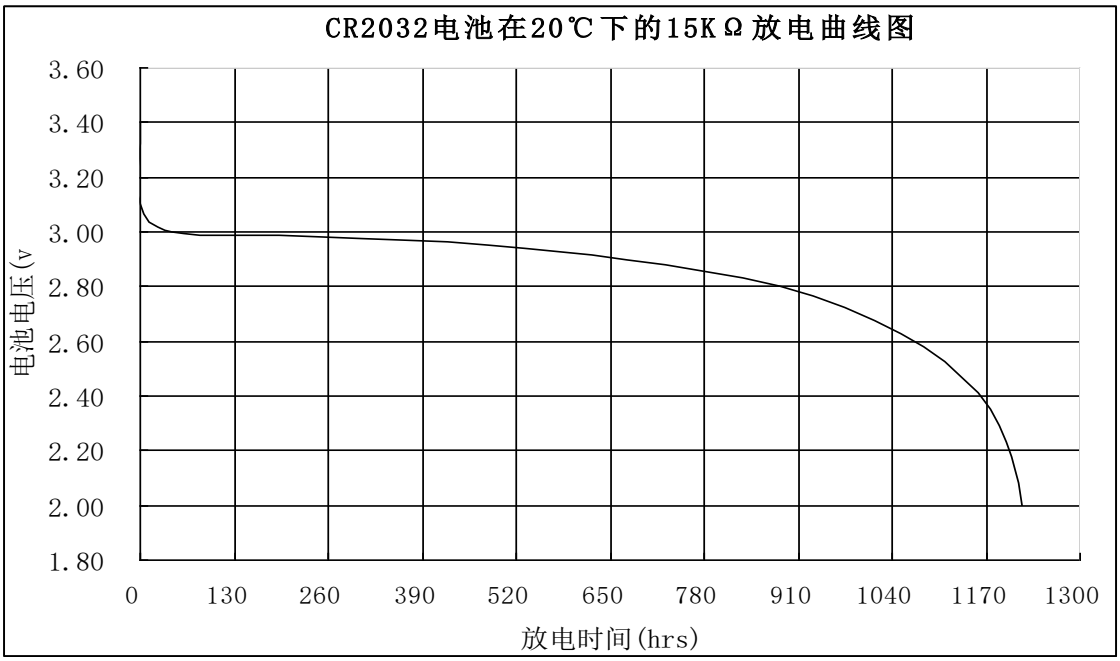

7. Material description and MSDS

ITEM	ELEMENT
Anode	Manganese Dioxide Powder
	Colloid Graphite Powder
Cathode	Lithium slice
	Ethylene Glycol Dimethyl Ether

Electrolyte	Propylene Carbonate
	Lithium Perchloride
Rind	Stainless steel shell
others	Fiberglass Septum,Acetylene Black

Attchment 1：LIDEV CR batteries MSDS

8. Environmental management and safety reports

This product comply with the EU RoHS directive and international/national related la ws and regulations, has passed RoHS testing from SGS,and also pass CE and UL safety test.

Attchment 2：CR batteries ROHS test report.

Attchment 3 ： CE and UL certification.

9. Packaging specification

PART NAME	3V Li-MnO2 button cell	MODEL	CR2032

1. packing diagram

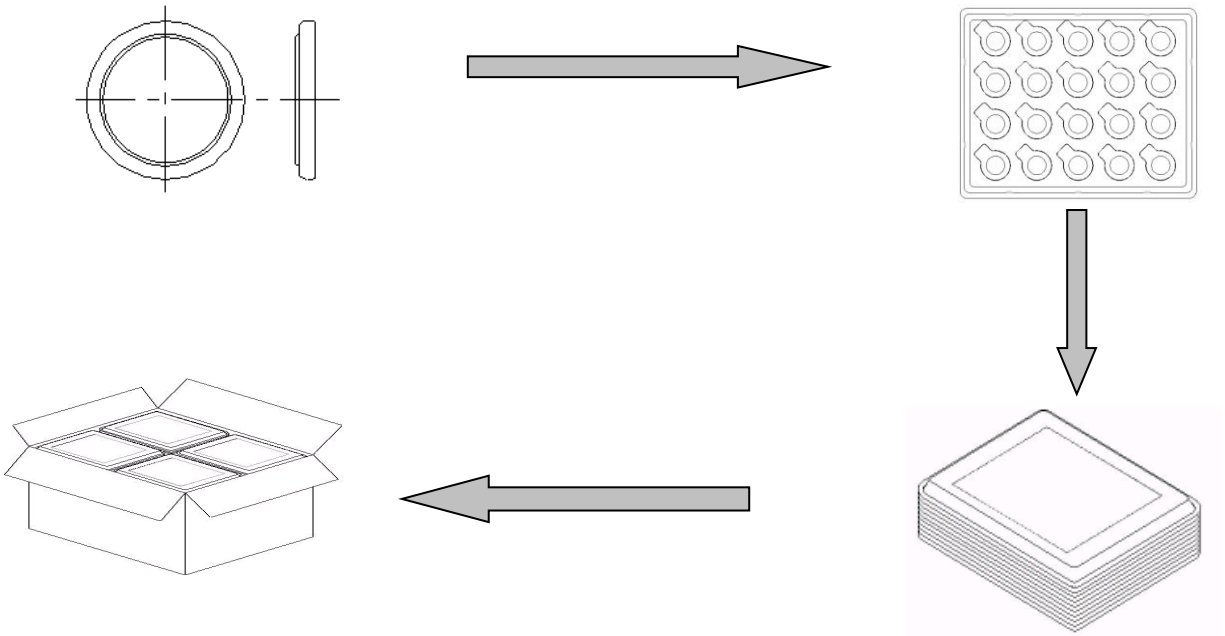

2.packing SOP:

1)20PCS batteries in a tray.

2)400PCS in a hyaline PE bag.

3).10 bags(4000pcs) in a carton.

4). Packing the carton and delivery to clients.

3.carton packing details.

Unit weight：3g /PC	Quantity ：4000PCS
Size: 34.5*28.5*21.0 cm；；	G.W.: 14.8 KG/Ctn

10. Battery holder

Please download the . specification of battery holder on our website:www.uchidg.com

11. Battery with pins

We supply the battery with tin-plated solder pins ,we can produce kinds of pins according to your design,please download the drawing of tagged battery with pins on our website: http://www.uchidg.com

12. Cautions

1)、Read the instructions on your device before installing batteries. Only use the size and type of battery specified in the instructions.

2)、Keep the contact point or surface clean .Check the contact point or surface to prevent the short circuit of the battery

3)、Insert the batteries properly. Follow the symbols showing the correct way to position the positive (+) and negative (-) ends of the batteries.

4)、Don't mix old and new batteries, or mix different types or makes of batteries.

5)、Don't heat,charge,crush, puncture, or otherwise damage batteries, This can result in leakage or rupture.

6)、Don't dispose of batteries in a fire — they may leak or rupture

7)、Don't dispose of batteries in water.

8)、Don't stack batteries.

9)、Don't disassemble the battery.

10)、Keep in a dry and cool place. Storage at place with high temperature(over +60'C)or low temperature(under -20'C) or place with humidity over 75% will lead to the capacity loss , derated electric performance and also safety problem.

11)、Keep away from the strong acid, alkali, oxide, and other corrosive materials.

12)、Keep batteries out of reach of children.

13)、Pay attention to the expire date of the battery.

14)、Do not dispose of used battery in natural environment ,like river ,lake, sea and land .Do not bury the used in battery the soil .

13. Handling instruction for emergency

1)、If short circuit, disconnect the wire or other conductor with the battery

2)、If installed battery with wrong direction, take out battery and follow the symbols s howing the correct way to position the positive (+) and negative (-) ends of the batt eries.

3)、If your skin get contact with the electrolyte, wash with water immediately.

4)、If bare batteries stacked (especially with very large quantity), which may generat e heat, or even explosion, please separate them immediately.

5)、If swallowed, contact a physician immediately.

6)、If fire or explosion happened, cover them with sand or soil to put out the fire . Dry powder fire extinguisher can be used to put out the fire. Do not use water .

7)、Avoid inhaling the irritative gas, which generated by the fire or explosion of batte ry .Clothes, towel or cotton material can be used to prevent inhaling, wet clothes or towel will be better. If inhaled the irritative gas ,please contact a physician.

14. Others

With product technology updates, the specification will be updated, please visit our w ebsite for the latest information, or contact with us to get the latest version of the s pecification.